WLD System Components by HW group

The business of reliable water detection in buildings is about really fast water detection and fast alarming (and alert escalation). To detect water in a building (nearby protected technology) within the first 5-15 minutes costs the end customer tens of hundreds of Euros. If a customer has invested time & money in analyzing where to install the sensing cable for water detection, the communication/alarm escalation must also be properly implemented. This article is about WLD zone devices from the HW group and best practices related to the alerting process.



Early warning of water flooding

The whole idea of why to invest 1000 - 5000 Euro for water detection system against simple water spot detector is based on the assumption that if you react

within first minutes, repair costs will be 10x lower compared to 10 cm of water in whole building.

Every building has a certain capacity of water that can be easily cleaned. You just have to be quick.

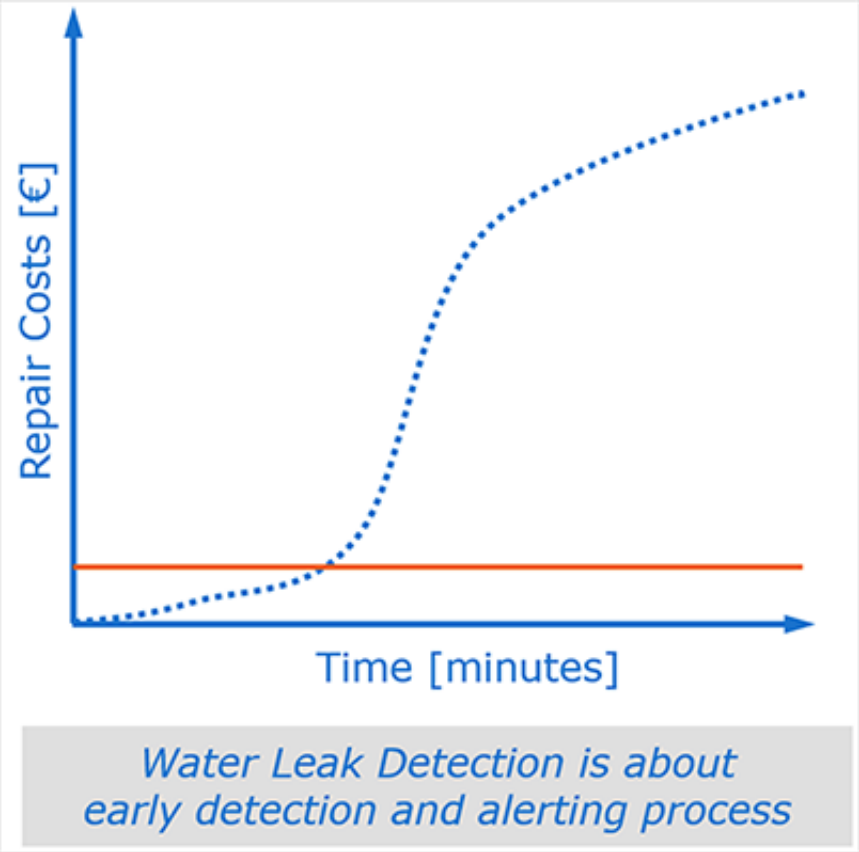

In order to respond quickly, you must have:

1. Water sensing cables installed in the right places;
2. Properly configured devices analyzing WLD zones + Portal (optional);
3. Alert escalation + processes;
4. Test the whole system from time to time.

Choosing the Right Water Leak Detection Device

HW group's Water Leak Detection system consists of a WLD sensing cable and a connected alarming device. There are currently 4 different remote monitoring devices with WLD zone input(s). Let's take a look at the differences between them.

	WLD2	SD-WLD	NB-WLD	WLD-Relay
WLD zones	4	1	1	1
NB-IoT	-	-	yes	-

(Cellular network)				
LAN (RJ45)	yes	yes	-	-
Wi-Fi	yes	yes	-	-
1Wire-UNI (RJ11)	-	-	-	yes
Relay output (NO/NC)	-	-	-	yes

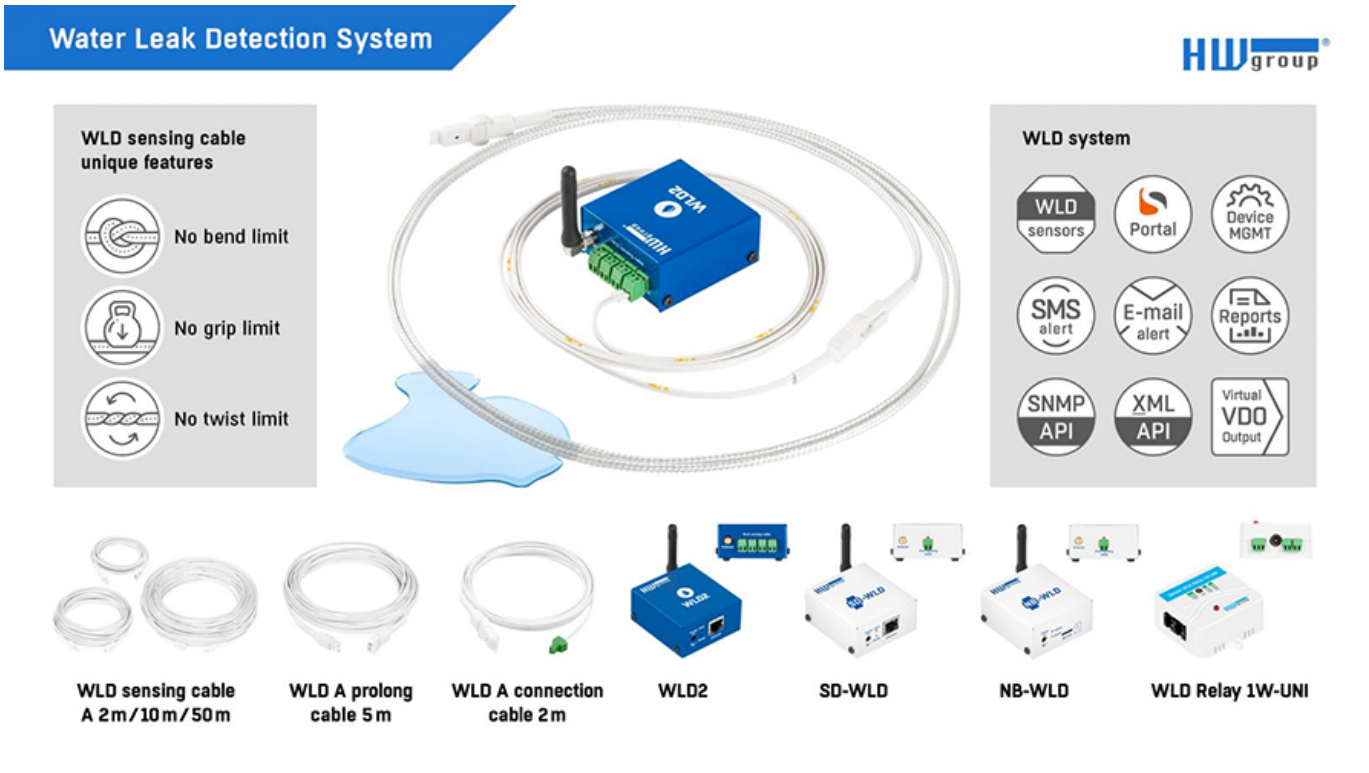

WLD2: Standalone Water Leak Detection

With 4 detection zone inputs (4x 185m of water sensing cable) and PoE / 5V power adapter, the WLD2 is the most universal water detection device. The WLD2 can send email alerts by itself or through an external Portal (SensDesk technology).



Water Leak Detection – WLD sensing cable A

HW group

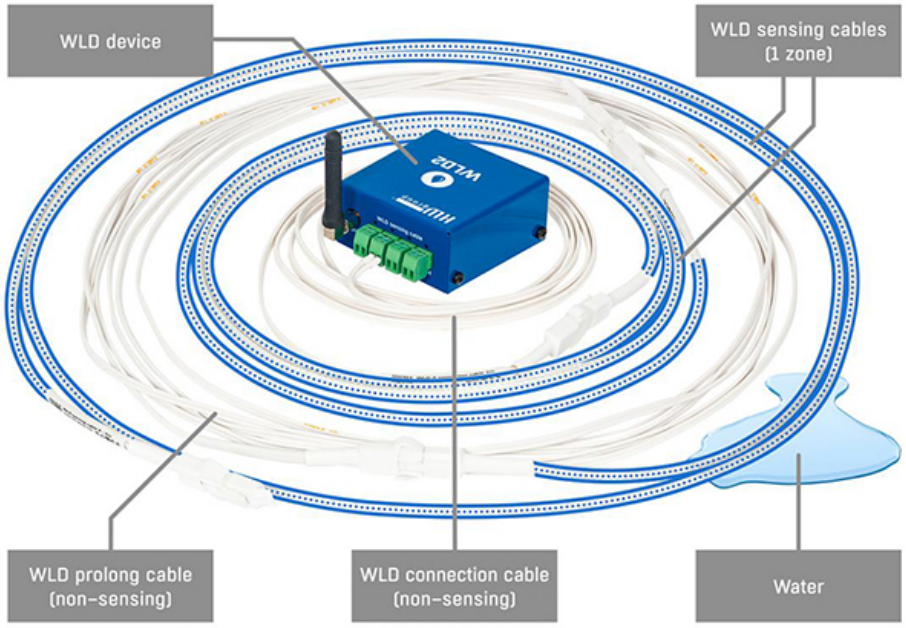

Unique features

- No bend limit
- No grip limit
- No twist limit

WLD sensing cable A detects liquid along the entire length of the cable.

4 WLD zones means the WLD2 can detect / identify water in 4 independent areas.

- Water detection in each zone can be indicated by:
  - External Relay output (with or without Portal);
  - Email (with or without Portal);
  - SMS / Call (with SMS GW or with Portal).

When customers use the Portal (even free HWg-cloud.com), there can be activated "Device Invalid Alert" feature. The portal will alert you if there is no power / communication with the portal.

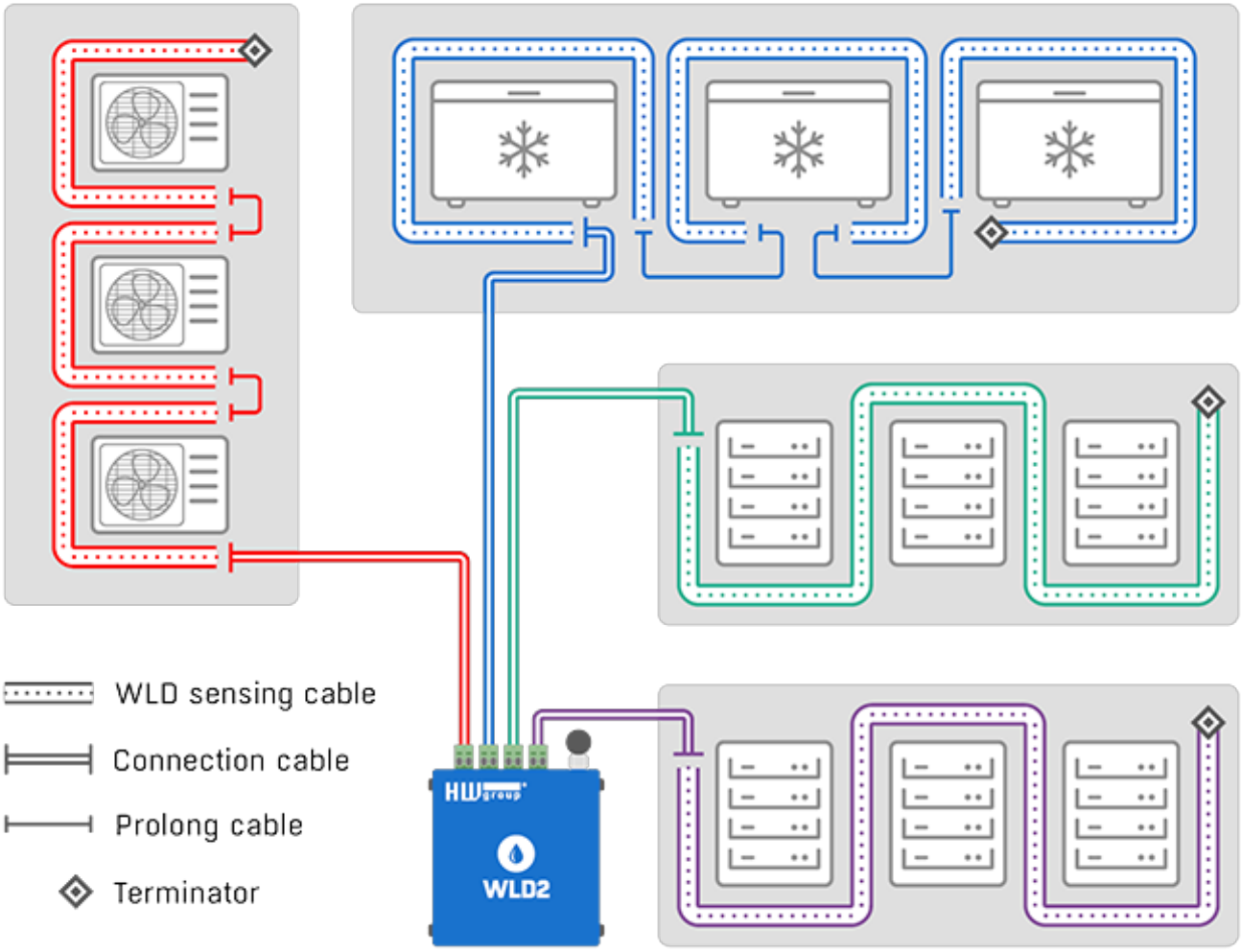

Product web page: https://www.hw-group.com/device/wld2

SD-WLD

The SD-WLD is a simple Water Leak Detection device with only 1 WLD zone input. Powered by PoE / 5V power supply. The SD-WLD is easy to install, there is no local configuration required, but external Portal is mandatory. Device itself can't send

alarm emails without Portal.



- SD-WLD can be powered by PoE;
- Portal connectivity is required;
- Portal provides centralized alert management (Email, SMS, Calls, SNMP, Relay Output);
- Portal provides "Device Invalid Alert" feature. The portal will alert you if there is no power/communication with the portal.

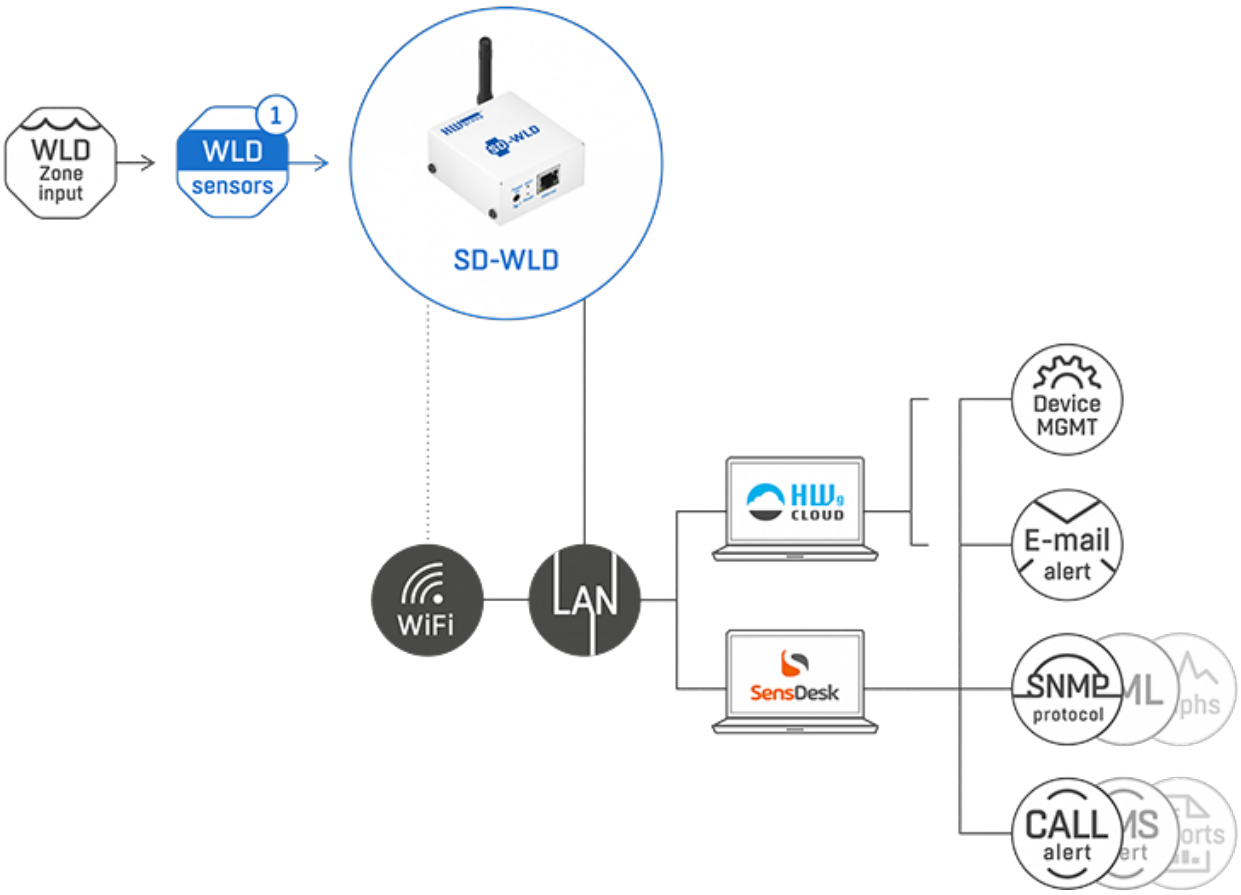

Product web page: https://www.hw-group.com/device/sd-wld

NB-WLD

NB-IoT cellular connected device for remote monitoring of 1 WLD zone (60 / 185 meters of sensing cable). 3-year SIM contract included, battery operation for up to 2 years.
Powered by an internal battery / 5V power supply, the NB-WLD is an ingenious device to warn you, even if there is a power failure at the remote location. External portal is mandatory, device itself can't send alerting emails without the Portal.


HW group
NB-WLD
Power 5V
Status
Setup
NB-SIM



- NB-WLD can be powered from internal battery for up to 2 years;
- When powered by internal battery, the maximum WLD zone length is 60m;
- Portal connectivity is required;
- Portal centralized alert management (Email, SMS, Calls, SNMP, Relay Output);
- Portal provides "Device Invalid Alert" feature. The portal will alert you if there is no power/communication with the Portal.

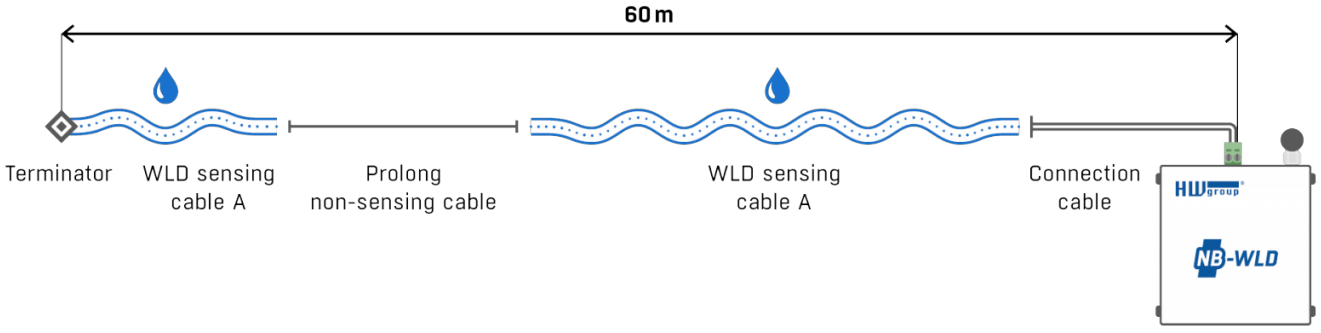

Product web page: https://www.hw-group.com/device/nb-wld

WLD Relay

The WLD Relay is a 1-WLD zone sensing device with 2 output options. Flooding can

be indicated by a switching relay output or as a 1-Wire UNI (RJ11) sensor. Via RJ11 it can be connected to many HWg devices with external sensor ports.



- WLD Relay is a universal device (WLD detector) that can be connected to any security system or DI (Dry Contact) on the IP camera, etc;
- Water detection is indicated locally by red LED diode on the device.

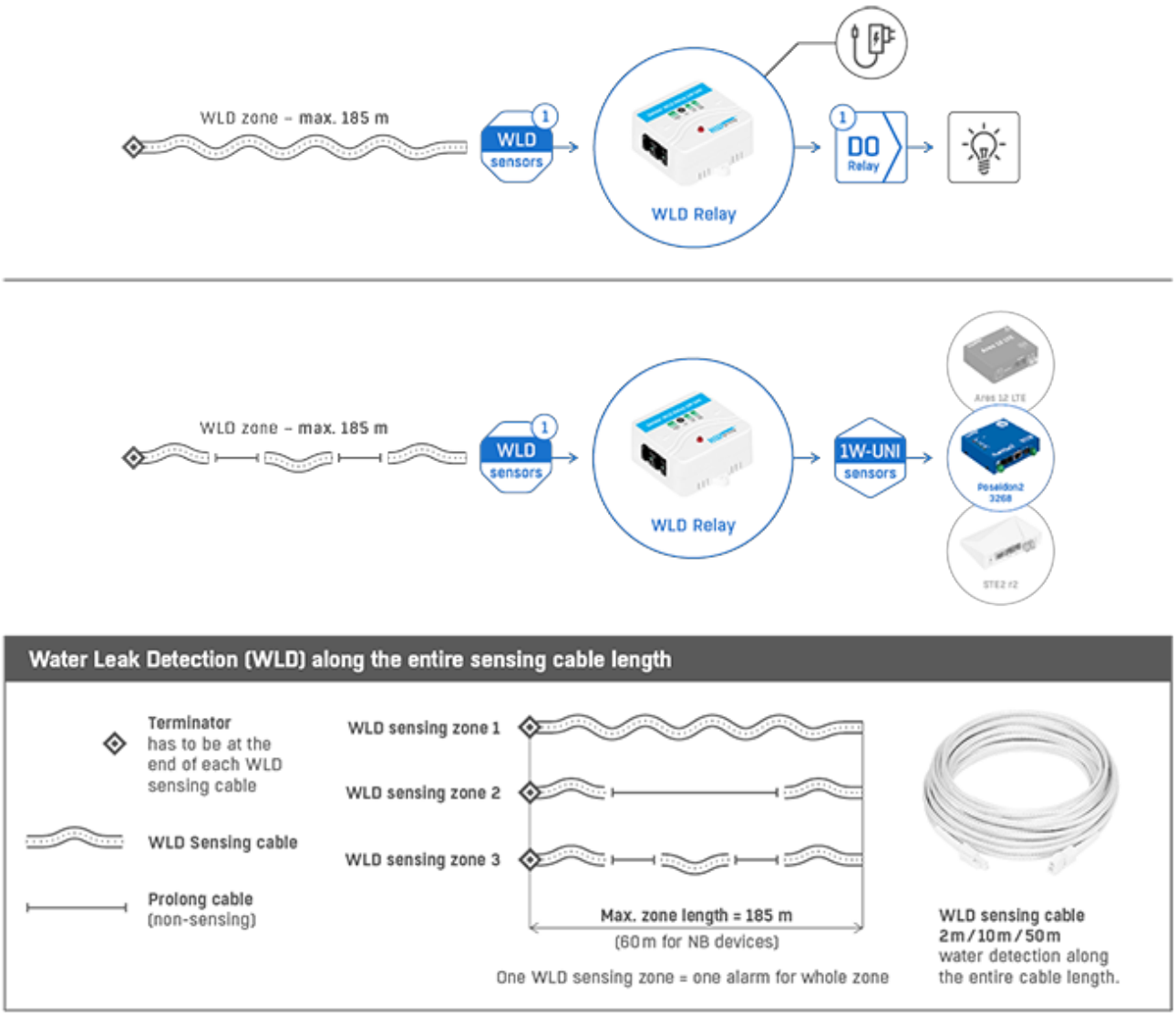

Product web page: https://www.hw-group.com/sensor/sensor-wld-relay-1w-uni

Alerting reality: Every minute counts

We are talking about long-term monitoring sensor installation. That means the customer installs a sensor, tests it, and it sits there quietly for 3-7 years. After that, you need to be alerted and "woken up" within 1-5 minutes. Every minute counts. Here are some best practices:

- Test the system once a year, that's best practice;
- Do not use public SMTP server for email alerting (use Portal or private SMTP server);
- Email is not enough;
- Use SMS / Calls for water alerting;
- **Use proper names in the WLD zone names**;

- Try to figure out after 7 years what "server room C flooded" is when you're responsible for 3 locations;
- Centralized management (Portal) of alerts is much better;
- Very few customers change the phone numbers/emails of the recipients in the devices.

	WLD2	SD-WLD	NB-WLD	WLD-Relay
SensDesk Portal Connectivity	Yes	Yes (mandatory)	Yes (mandatory)	Via external device
Web interface, SMTP	Yes	Via portal	Via portal	-
E-mail alert	Yes	Via portal	Via portal	-
SMS & Call alert	Via SMS Gateway or Portal	Via portal	Via portal	-
Disconnected device alert	Via portal	Via portal	Via portal	Yes (sensor = -999)
Remote relay alert	Yes	Via portal	Via portal	Via external device
Multigraphs, PDF reports	Via portal	Via portal	Via portal	-
Open API (SNMP, XML)	Yes	Via portal	Via portal	-

Summary of WLD System by HW group

WLD System from HW group will help any customer to safely monitor the remote site for very small amounts of water, and provide timely alerts via various mediums when the liquid is detected.

You can find more details in our summary "**Water Leak Detection (WLD) system**" article:
https://www.hw-group.com/support/water-leak-detection-wld-system

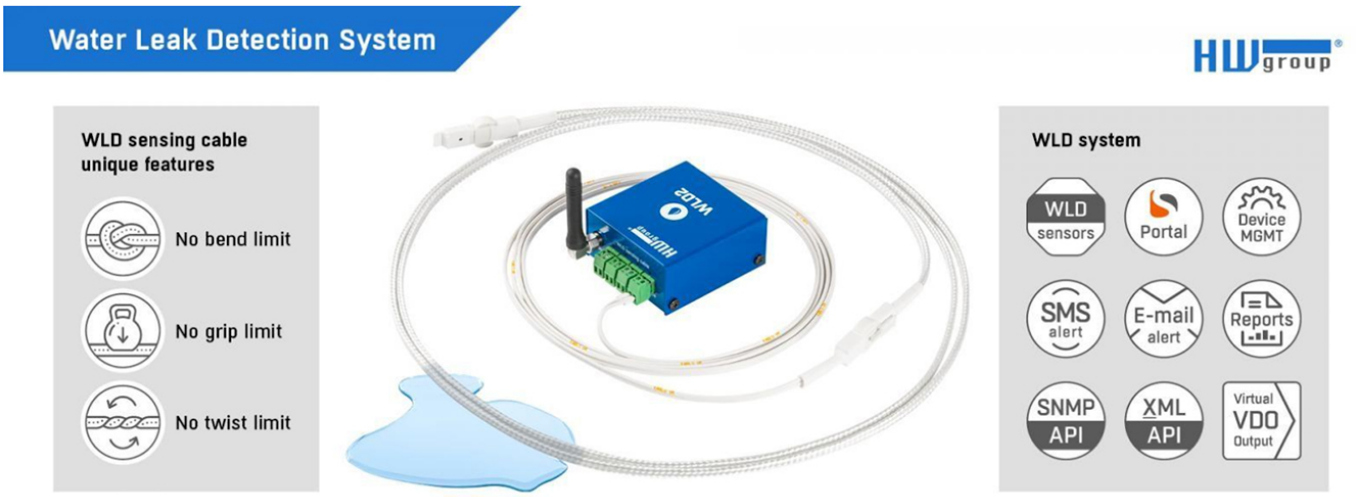

Take a look at the [video explaining all the different options of the WLD system](#).

